BRABBU

DESIGN FORCES

CASEGOODS UPHOLSTERY LIGHTING RUGS ART ACCESSORIES

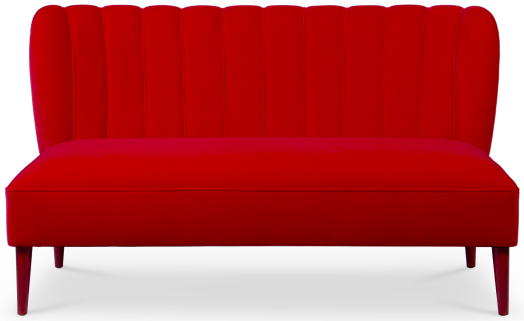

DALYAN | TWO SEAT SOFA

If Cleopatra was alive today, how would it be the furniture of her palace? That was the question which dared our team of designers and the mid century modern design chair DALYAN is the answer. DALYAN two seat sofa is a home furniture piece in which balance is represented. Balance between feminine shapes and neutral tones. It resembles the famous mud baths in Turkey, appreciated by Cleopatra for its beauty benefits. DALYAN two seat sofa will bring beauty to every decor, whether regarding a palace, a villa or an apartment. The synthetic leather of this home furniture piece will give the final touch to every project.

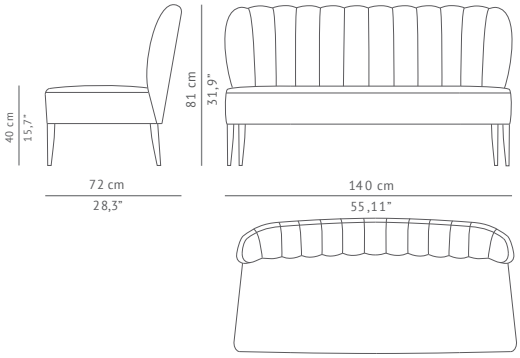

DIMENSIONS

WIDTH	140 cm | 55,11"
DEPTH	72 cm | 28,3"
HEIGHT	81 cm | 31,88"
SEAT HEIGHT	40 cm | 15,74"
SEAT DEPTH	46 cm | 18,11"

MATERIALS

FABRIC	Synthetic leather
FABRIC REFERENCE	BB MOSS I COLOUR 40
FABRIC NEEDED	12 mts | 472,44" (Standard width 1,40mts | 55")
LEGS	Matte lacquer

FABRIC / LEATHER REQUEST

COM	12 mts | 472,44" (Standard width 1,40mts | 55")
COL	184,8 sq ft

PACKAGING

DIMENSIONS	W 150 cm | 59,16" D 82 cm | 32,28" H 88 cm | 34,64"
VOLUME	1,08m³ | 50,85 ft³
WEIGHT	50kg | 99 lbs

LEAD TIME

Production time is between 6 to 8 weeks for BRABBU collections.
Delivery time is not included.

All of our furniture can be made to measure and it is available in different finishes.
Please note that the colours and materials shown are for reference only and small variations may occur.